# A novel synchronization scheme for free-space quantum key distribution system

Feng Tang, Shuang Gao, Xiaofei Wang and Bing Zhu*
Dept. of Electronic Engineering and Information Science,
University of Science and Technology of China, Hefei, Anhui 230027, China

## ABSTRACT

We propose a novel synchronization scheme using a periodic light pulse for free-space quantum key distribution (QKD) system. For our 10MHz system, the repetition rate of timing pulse in the novel synchronization scheme can be reduced to 100 KHz or even lower. It allows employing a KHz repetition rate ultrashort pulse laser as timing synchronization source to implement high precision time synchronization. In this paper, short term time drift induced by atmospheric turbulence is analyzed, and how the time deviation impacts on the final secure key generation rate in our QKD system is calculated. In addition, we carried out the QKD experiments over the distance of 1.38 km. The results of the experiments indicate that our scheme is feasible.

**Keywords:** quantum key distribution, time synchronization, atmospheric turbulence

## 1. INTRODUCTION

Recently quantum key distribution (QKD) has attracted great attention because of the absolute security based on the fundamental laws of physics[1]. Since the limitation of the maximum secure distance in the fiber, free-space QKD is indispensable to implement the global QKD network[2]. However, due to the open channel in free-space, the background light interferes in the system and impacts on the quantum-bit error rate (QBER). In order to reduce the influence of the background noise and dark counts of the detector, the single-photon detector (SPD) is usually set in the gate mode, that is, only when the signal photons are expected to arrive is the SPD enabled to receive them, thus other noise photons arriving outside the time gate can be blocked. Therefore a precise synchronization between the sender and receiver should be established to predict the single photon's arrival time. The accuracy of the timing signal determines the time gate filtering ability of the system.

Since the key generation rate of long distance free-space QKD experiment is nonideal[3], it is still impractical for performing quantum cryptography communications with one-time-pad method. In order to increase the key rate, it is a possible way to develop high speed QKD with the magnitude of GHz or even higher[4]. However, high timing resolution is required to increase the repetition rate of a free-space QKD system. In fact, the requirement of the synchronization accuracy in QKD is higher in comparison with the optical communication at the same modulation rate. To date, there are two ways to achieve this. One is to adapt clock recovery techniques over radio/optical communication[4, 5] or to utilize the time signal of global position system (GPS)[3]. The other method is transmitting periodic bright light pulse as precursor to denote the subsequent signal photon's arrival time[6]. The latter method which we use all along this study can be implemented easily and it also contains the time delay characteristic of the atmospheric channel.

A synchronization system in QKD is designed to transmit and receive the time reference that has been superimposed by modulation onto the optical pulse. The timing signal, which is normally generated from intensity modulated optical source such as semiconductor laser, passes through the atmosphere and is collected into an optical receiver which is typically a direct detection receiver. In the conventional synchronization scheme[6], every timing pulse is transmitted with every quantum pulse to denote the time when this particular quantum pulse will enter the SPD in the receiver. The ratio of synchronization light pulses to signal light pulses is 1: 1. That is a one-to-one correspondence between them. However optical signals are always disturbed by various atmospheric effects and are photodetected in the presence of various electronic noises. Therefore the ability of the receiver to recover the time reference from the altered pulse is

* zbing@ustc.edu.cn

Optical Transmission Systems, Subsystems, and Technologies IX, edited by Xiang Liu,
Ernesto Ciaramella, Naoya Wada, Nan Chi, Proc. of SPIE-OSA-IEEE Asia Communications and Photonics,
SPIE Vol. 8309, 83093C · © 2011 SPIE-OSA-IEEE · CCC code: 0277-786X/11/$18 · doi: 10.1117/12.917952

deteriorated, which gives rise to the QBER. In order to minimize the effects of these noises and to reduce the interference on the quantum channel, we propose a novel synchronization scheme (see in figure 1), which synchronization light pulses and signal light pulses are in the ratio of 1: n. It is a semi-offline synchronization scheme for QKD. Our study shows that n is more than 100 at least. Especially in the case of high speed QKD, the ratio can be further decreased. In contrast with the conventional 'dense' scheme, it takes advantage of employing high power low repetition rate pulse laser to offer precise time reference for high speed QKD because of its narrow pulse width. And we also reduce the cost of system and the light interference on the quantum channel by making the timing light pulses sparse.

Our free-space QKD system is based on BB84 protocol with polarization coding. On the quantum channel, the signal photons randomly polarized in one of the four states with wavelength 650 nm are transmitted at a repetition rate of 10 MHz. The duty ratio is 1:10. Under the conventional synchronization scheme, bright light pulses with wavelength 1550 nm is sent out at the same repetition rate on the classic atmospheric channel to maintain the clock synchronization. For every signal pulse, the SPD in the receiver opens a 10ns time gate with the time reference offered from every timing pulse. However, in our 'sparse' synchronization scheme, the timing pulses are transmitted at a repetition rate of 100KHz. Each timing pulse corresponds to 100 signal pulses. Therefore it works on this way: once the timing pulse arrives, the time reference is immediately adjusted and directly offered to the SPD in the receiver. At the other time intervals, the gate signal for the SPD is generated from a crystal oscillator in the receiver. Although the pulse laser can send out high precise time reference, the timing pulses are sparse compared with the modulation rate of the QKD system. Therefore the time-varying characteristic of the atmosphere might interfere in the delivery of the time reference so that the time resolution for the gate is deteriorated with time and finally it gives rise to the QBER of system.

In this paper, we calculate that to what degree can the timing pluses be spared in the atmosphere channel and how the synchronization time accuracy impacts on the key rate. Under our system condition, the maximum synchronization time interval has been derived. We have carried out a 1.38 km outdoor free-space QKD experiment to validate it

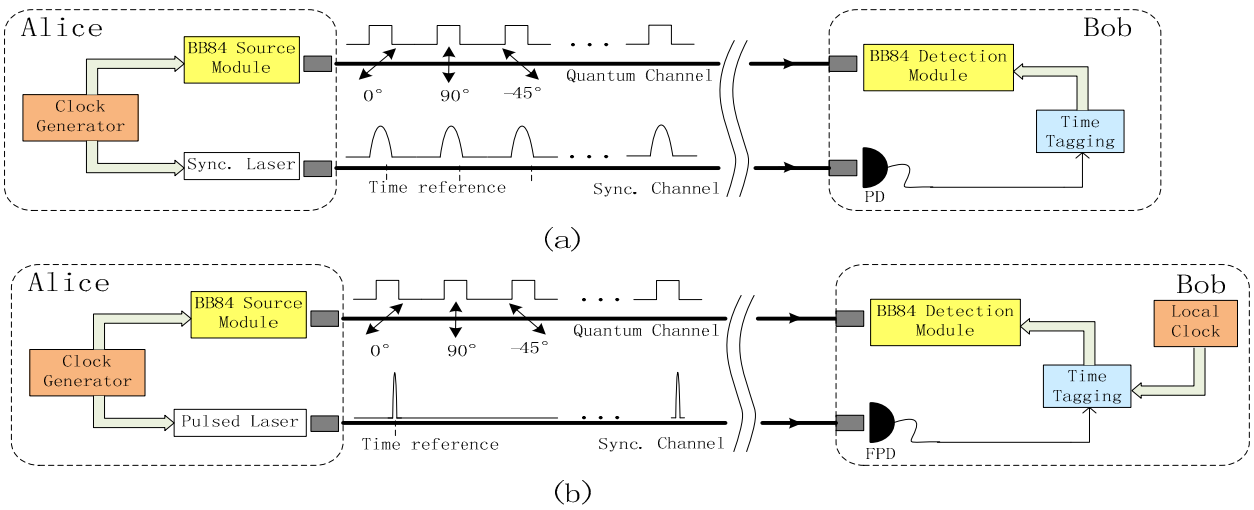


Fig.1 The schematic diagram of the conventional synchronization scheme (a) and our scheme (b)

## 2. THEORETICAL ANALYSIS

Atmosphere is a sort of complicated and volatile optical medium. When laser beam propagates through the atmosphere, the time message which is carried by the pulse will be disturbed due to atmospheric scattering and refraction[7]. The radiation transmission characteristic of atmosphere varies under different weather conditions. For instance, pulse will broaden and delay, when it goes through the fog. Such influences brought by vapor and particles in the atmosphere usually fluctuate slowly in a time scale of hours or days. Therefore it normally does not cause a variation to the system clock. But the small changes in refractive index, which are related primarily to the small variations in temperature, induce the turbulent noise into the time reference delivery. Besides the time reference may drift on account of the

frequency instability of the crystal oscillator. These factors affect the synchronization accuracy and consequentially results in the rise of the QBER.

### 2.1 The influence of the atmospheric channel

As a micro scale movement, atmospheric turbulence plays a leading role in the influence of short term time drift. There are two aspects taken into account: optical path delay fluctuations and time recovery from disturbed pulses

Although the refractive index fluctuation is merely on the order of $10^{-6}$, the changes are accumulated along the optical path. So the transmit time of optical pulse through the turbulent atmosphere varies. In order to solve the problem of laser beams go through the atmosphere, Tatarskii[8] and other workers built an atmospheric model with random lens hypothesis. Optical phase fluctuations had been studied. Gardner[9] derived the formula of optical path delay fluctuations using geometric optics. The mean square path deviation is given by:

$$< \Delta L^2 >= 26.3 L_0^{5/3} \int_0^L C_n^2(\xi) d(\xi) . \tag{1}$$

where <*> denotes ensemble averaging, $L_0$ is the turbulence outer scale, L is the propagation distance and $C_n^2$ is the refractive-index structure constant.

The parallel path structure function between $r_1$ and $r_2$ with an interval of distance d is:

$$\begin{aligned} D_{\Delta L}(d) &=< [L(r_1) - L(r_2)]^2 >=< [\Delta L(d)]^2 >= 0.2093(\frac{d}{L_0})^{5/3} < \Delta L^2 > \\ &= 5.5(d)^{5/3} \int_0^L C_n^2(\xi) d(\xi) \end{aligned} \tag{2}$$

According to the Taylor's 'frozen turbulence' hypothesis[10], the difference of light distances between two parallel paths can be transformed into the difference of arrival time intervals in a single path. So there is:

$$< \Delta L(t)^2 >= 5.5(vt)^{5/3} C_n^2 L \tag{3}$$

where v is the mean wind speed which is transverse to the direction of the propagation and $C_n^2$ represents the mean turbulence strength along the propagation path.

Therefore the synchronization resolution deteriorates with time because of the fluctuation of refractive index in the atmosphere. The mean square time drift is:

$$t_{ato}{}^2 =< \Delta L(t)^2 > / c^2 = 5.5(vt)^{5/3} C_n^2 L / c^2 . \tag{4}$$

Considering the circumstances in practical, parameter L=20km, v=10m/s, and $C_n^2 = 2.5 \times 10^{-13}$ represents the strong turbulence. We have:

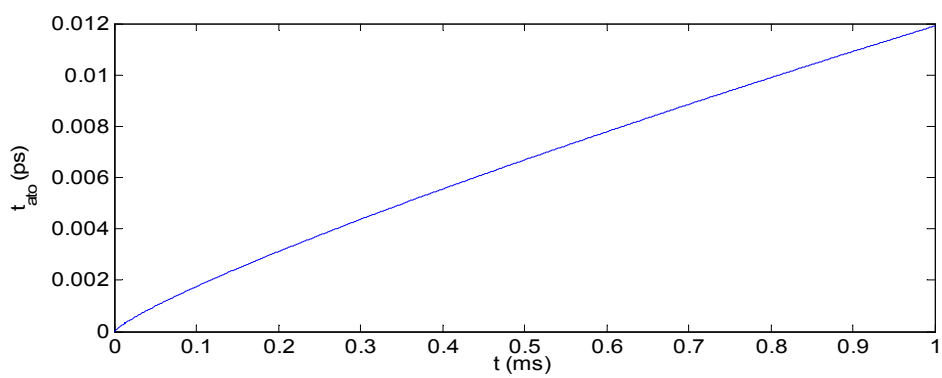


Fig.2 Relationship between time and time reference drift

The time drift is less than 0.1ps when t is 1ms. Figure 2 indicates that even if the pulses go through the distance of 20 km in the atmosphere under strong turbulence condition, the magnitude of optical time delay fluctuation is very small. In comparison with other fluctuations, it is negligible.

The timing pulse is disturbed when it goes through the atmosphere channel. Thus there is a timing error caused by the atmospheric noise, when the receiver is recovering time reference from those disturbed pulses. For a single color communication system, learned from the knowledge of the two-frequency mutual coherence function[7, 11] for wave propagation through atmosphere, the group delay is a constant on the occasion of GHz or even higher to 100GHz. Hence the pulse shape remains unchanged. Besides, atmospheric turbulence causes phase variations along the path that are manifested in scintillation, high beam divergence, angle-of-arrival fluctuation and so on. All these effects translate into the intensity noise of the pulses, since the time scale of the noise is about some hundred Hz. The time jitter originated from the scintillation noise can be reduced by using a constant fraction discriminator[12] to determine the arrival time of the timing pulse. And the time jitter induced by the intensity fluctuations is smaller than the risetime of the pulse. So there is:

$$t_{hei} < 0.5\tau \tag{5}$$

where $\tau$ is the pulse width. We see that the time jitter decreases with the pulse width. Thus the accuracy of time synchronization improves in virtue of employing ultrashort pulse laser. For a 10GHz system, $\tau$ =100ps, thus $t_{hei}$ <50ps.

### 2.2 Local system clock drift

Even if there is no disturbance in the channel, the time reference drifts itself because of the instability of the clock which is originated from a crystal oscillator. Therefore it is still necessary to make the synchronization at regular intervals. The stability of common crystal oscillator varies from $10^{-5}$ to $10^{-6}$. Those adopting temperature compensation methods can achieve a stability of $10^{-10}$.

In our experimental system, we use a common type crystal oscillator produced by MEC. The frequency stability is $\delta$ =30ppm. Hence the time drift brought by the crystal oscillator is: $t_{osc} = \delta t$ The time drift in 1 ms is about 30 ns. All together, we have got the total time variations:

$$t_{all}{}^2 = t_{ato}{}^2 + t_{osc}{}^2 + t_{hei}^2 \tag{6}$$

Thus it can be seen that the accuracy of time synchronization is mainly depended on the frequency stability of the crystal oscillator, when we carry out our 'sparse' synchronization scheme which introduces a short pulse width laser to be utilized.

### 2.3 Key rate with timing error

In the QKD system, the precursor light pulse determines the time basis for the time gate of the SPD. The accuracy of opening the time gate is based on the time variations of the pulse. When the time basis jitters, the power level of the noises composed of stray light and dark counts remains unchanged because the gate maintains opening at the same length. Time jitter mainly impacts on the power level of the received signal and results in the rise of the QBER. Thus the final key generate rate is decreased. According to our experiment system and the noise data measured at the outdoor, we have calculated how the time error affects the key rate. The parameters are listed below in Table 1.

Tab.1 Parameters for QKD experiments

| Signal state u [/pulse] | Decoy state v [/pulse] | Attenuation α[dB/km] | Wavelength λ[nm] | Noise level $Y_0$[/pulse] | Frequency F[MHz] | Efficiency $\eta_{Bob}$ | Detector Efficiency $e_{detector}$ |
|---|---|---|---|---|---|---|---|
| 0.1 | 0.05 | 0.2 | 650 | $1.25\times10^{-5}$ | 10 | 0.25 | 0.7 |

Assuming that the gate width is the same as the pulse width and the pulse shape is rectangular, the relationship between the time error ( $T = \frac{t_{all}}{\tau}$ ) and the key rate (R) is derived from the key generate rate calculating formula[13]:

$$R \geq q\{-Q_u f(E_u) H_2(E_u) + Q_1[1 - H_2(e_1)]\} \tag{7}$$

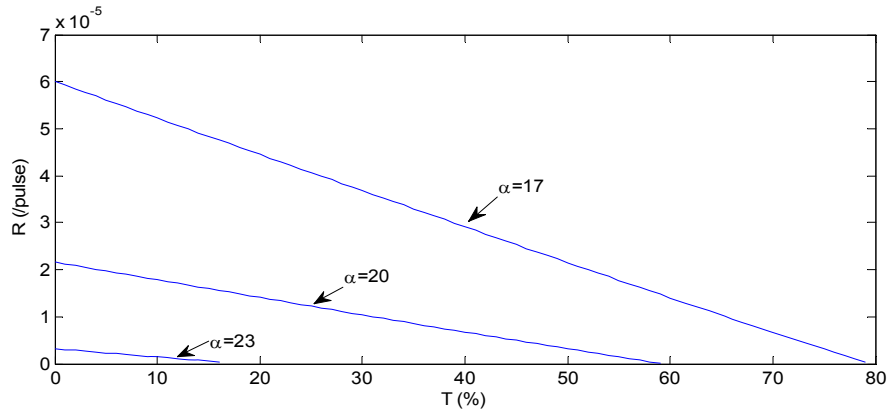


Fig.3 Relationship between the time error and the key rate under different channel attenuation

Figure 3 shows that the key rate decreases, while the timing error increases. The more severe the attenuation is, the more precision the system should require. From figure 4, we can see that increased time error not only fix the key rate at a lower level but also shorten the maximum safe distance for QKD.

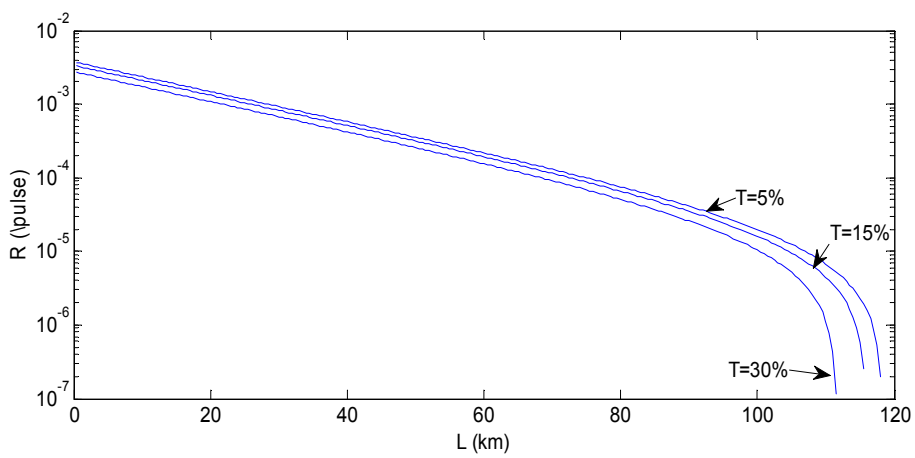


Fig.4 Relationship between the distance and the key rate with different time error

In our QKD experimental system, the signal pulse width is 6.6 ns. Choose t=0.5 ns as the maximum tolerance time error. It is derived from Eq.6 that the maximum synchronization time interval is 13 ms. It implies that the synchronization timing pulses should be sent at a repetition rate of 77 KHz or above. Note that the time error mainly depends on the frequency stability of the crystal oscillator. It is easy to reduce the repetition rate requirement to 10 KHz or even lower by utilizing crystal oscillators with better performance. Therefore high power low repetition rate pulse laser can be employed as the light source in the synchronization scheme for the QKD. These types of laser can make a further reduction of the timing error by their narrow pulse widths. Meanwhile high peak power reduces the requirement for the

sensitivity of the detector and offer more redundancies. The sparseness bright pulses in time domain also reduce the light interference in the quantum channel.

## 3. EXPERIMENTAL RESULTS

We have carried out an outdoor QKD experiment on the distance of 1.38 km between two buildings in the campus of the University of Science and Technology of China. The feasibility of the 'sparse' synchronization scheme is verified.

In our experiment, the timing pulses and the signal pulses are sent out at the same repetition rate of 10MHz. We employ an oscilloscope to record both the waveforms of the timing pulses and the single photon events given by the different SPDs, which represent the different polarization states of the arriving photons. The time reference is derived from the timing pulse by setting a certain threshold in the synchronization processing. Then the single photon events outside the time window are filtered out according to the time reference. Based on the information of the predetermined transmitting sequences of different polarization states, we can calculate the number of both wrong keys and sifted keys from the single photon events left. So the quantum-bit error rate is

$$QBER = N_{wrong} / N_{sifted} \tag{8}$$

where $N_{wrong}$ is the number of wrong keys calculated from the record and $N_{sifted}$ is the number of whole sifted keys.

In order to evaluate the performance of the QKD system under the 'sparse' synchronization scheme, the time reference is derived under different repetition rates of timing signal ranging from 10 MHz to several hundred Hz. While the timing pulse is absent, the time reference is calculated by software. Thus we can obtain the QBER of our system corresponded to the synchronization rate. Figure 5 shows the QBER under various repetition rates of synchronizations, compared with the original QBER in the conventional synchronization scheme. These triangle symbols in figure 5 denote the experimental points. As the synchronization time interval increases, the error gradually rises. When the repetition rate is 100 KHz, the quantity of the secure key we obtained remains basically the same. But when the repetition rate reduces to some hundred Hz, the error deteriorates sharply. In that case, the system cannot work properly.

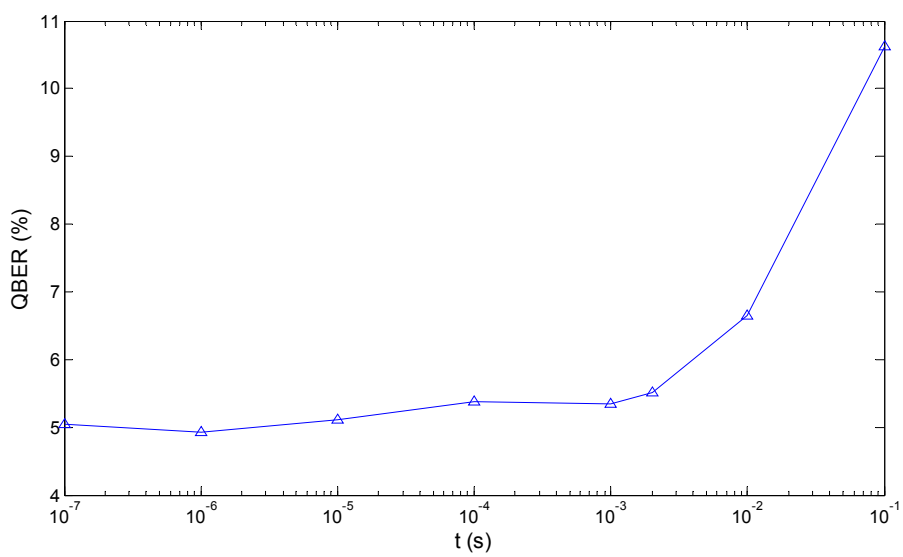


Fig.5 The QBER with the increasing synchronization time interval

## 4. CONCLUSIONS

The time characteristics of the atmospheric channel have been studied. Therefore the factors that decrease the synchronization accuracy have been evaluated. Based on the analysis, we propose a novel 'sparse' synchronization scheme which may help improving the timing resolution for high speed QKD in the future. Experimental results and calculation show that, our scheme is feasible.

## REFERENCES


[1] V. Scarani, et al., "The security of practical quantum key distribution," Reviews of Modern Physics, vol. 81, pp. 1301-1350, 2009.

[2] M. Pfennigbauer, et al., "Free-space optical quantum key distribution using intersatellite link," in: Proceedings of the CNES—Intersatellite Link Workshop, 2003.

[3] T. Schmitt-Manderbach, et al., "Experimental demonstration of free-space decoy-state quantum key distribution over 144 km," Physical Review Letters, vol. 98, 2007.

[4] D. J. Rogers, et al., "Free-space quantum cryptography in the H-alpha Fraunhofer window," Proc. of SPIE vol. 6304, 2006

[5] J. G. Rarity, et al., "Secure free-space key exchange to 1.9 km and beyond," Journal of Modern Optics, vol. 48, pp. 1887-1901, 2001.

[6] R. J. Hughes, et al., "Practical free-space quantum key distribution over 10 km in daylight and at night," New Journal of Physics, vol. 4, 2002.

[7] A. Ishimaru, Wave propagation and scattering in random media, Wiley-IEEE Press, 1999.

[8] V. Tatarskii, The Effects of the Turbulent Atmosphere on Wave Propagation, translated by R.A.Silverman Mcgraw-Hill, 1961.

[9] C. Gardner, "Effects of random path fluctuations on the accuracy of laser ranging systems," Applied Optics, vol. 15, pp. 2539-2545, 1976.

[10] L. C. Andrews, et al., Laser beam scintillation with applications, SPIE Press, 2001.

[11] C. Y. Young, et al., "Time-of-arrival fluctuations of a space-time Gaussian pulse in weak optical turbulence: An analytic solution," Applied Optics, vol. 37, pp. 7655-7660, 1998.

[12] Q. L. Wu, et al., "Synchronization of free-space quantum key distribution," Optics Communications, vol. 275, pp. 486-490, 2007.

[13] X. Ma, et al., "Practical decoy state for quantum key distribution," Physical Review A, vol. 72, 2005.