A novel method of multi-scale simulation of macro-scale deformation and microstructure evolution on metal forming

Shiquan Huang [a], Youping Yi [b], Pengchuan Li [c]

[a, b] *School of Mechanical and Electrical Engineering, Central South University, Changsha 410083, China*
[c] *China National Erzhong Group Co., Deyang 618000,China*

Abstract. In recent years, multi-scale simulation technique of metal forming is gaining significant attention for prediction of the whole deformation process and microstructure evolution of product. The advances of numerical simulation at macro-scale level on metal forming are remarkable and the commercial FEM software, such as Deform2D/3D, has found a wide application in the fields of metal forming. However, the simulation method of multi-scale has little application due to the non-linearity of microstructure evolution during forming and the difficulty of modeling at the micro-scale level.
This work deals with the modeling of microstructure evolution and a new method of multi-scale simulation in forging process. The aviation material 7050 aluminum alloy has been used as example for modeling of microstructure evolution. The corresponding thermal simulated experiment has been performed on Gleeble 1500 machine. The tested specimens have been analyzed for modeling of dislocation density, nucleation and growth of recrystallization(DRX). The source program using cellular automaton (CA) method has been developed to simulate the grain nucleation and growth, in which the change of grain topology structure caused by the metal deformation was considered. The physical fields at macro-scale level such as temperature field, stress and strain fields, which can be obtained by commercial software Deform 3D, are coupled with the deformed storage energy at micro-scale level by dislocation model to realize the multi-scale simulation. This method was explained by forging process simulation of the aircraft wheel hub forging. Coupled the results of Deform 3D with CA results, the forging deformation progress and the microstructure evolution at any point of forging could be simulated. For verifying the efficiency of simulation, experiments of aircraft wheel hub forging have been done in the laboratory and the comparison of simulation and experiment result has been discussed in details.

Keywords: cellular automaton; dynamic recrystallization; grain deformation, aircraft wheel, dislocation density, DEFORM.
PACS: 02.90.+p

INTRODUCTION

Dynamic recrystallization (DRX) is an important metallurgical phenomenon during hot forming, which have great effects on microstructure and mechanical properties of materials. Consequently, the prediction of DRX plays an important role in design of hot forging process. Although the commercial FEM software, such as Deform 3D, has found a wide application in the fields of metal forming at macro-scale level [1-5]. Various attempts have been made to model the DRX processes at the micro-scale level, i.e., Monte Carlo (MC) and CA method [6-10]. The simulation method of multi-scale has little application due to the non-linearity of microstructure evolution during forming and the difficulty of modeling at the micro-scale level.

In this work, models of DRX for 7050 aluminium alloy were established through isothermal compression tests. Coupled with CA and Deform 3D, a new method of multi-scale simulation in forging process was introduced, which considered effects of varied physical fields, deformation history and grain deformation on microstructure evolution. For verifying the efficiency of simulation, the experiments of aircraft wheel hub forging have been done in the laboratory. It is noticed that the simulated results, such as flow stress and microstructure, agreed well with those of experiments.

The 14th International ESAFORM Conference on Material Forming
AIP Conf. Proc. 1353, 103-108 (2011); doi: 10.1063/1.3589499

MODELS OF DRX

Physical fields, such as temperature field, strain rate and strain fields, vary during forging process. Microstructure evolution changes with different deformation history. Consequently, dynamic model of DRX based on dislocation density was established to consider effects of varied physical fields and deformation history during forging process. It includes DRX nucleation, DRX grain growth and dislocation density model which represents DRX force.

Model of Dislocation Density

Two factors influence the dislocation density ρ during hot deformation: work hardening and dynamic recovery (softening). Kocks and Mecking have proposed K-M model to predict the variation of dislocation density. The dislocation density with respect to strain can be expressed as:

$$\frac{d\rho}{d\varepsilon} = k_1\sqrt{\rho} - k_2\rho \tag{1}$$

where ε is the strain, $k_1 = 2\theta_0 / (\alpha\mu b)$ is the constant that represents work hardening, α is the dislocation interaction term, μ is the shear modulus, b is the Burger's vector, $\theta_0 = d\sigma / d\varepsilon$ is the hardening rate which can be obtained from the slope of the experimental flow stress-strain curve. k_2 is the softening parameter that represents recovery of dislocations. Two kinds of k_2 ($k_2 = 2\theta_0 / \sigma_p$ pre-DRX and $k_2 = 2\theta_0 / \sigma_s$ after DRX) were proposed to express grain recovery efficiency respectively, where σ_p is peak stress expressed by Z parameter ($Z = \dot{\varepsilon}\exp\left[Q/(RT)\right]$) and σ_s is steady stress. Parameters of 7050 aluminium alloy were obtained through isothermal compression test [11].

$$\sigma_p = 64.935\ln\left\{\left[Z/2.2566\times10^{15}\right]^{1/8.032} + \left\{\left[\left(Z/2.2566\times10^{15}\right)\right]^{2/8.032} + 1\right\}^{1/2}\right\} \tag{2}$$

$$\sigma_s = 3.1965\times10^3\,\varepsilon^{-0.07418}\dot{\varepsilon}^{0.1223}\exp(-0.00538T) \tag{3}$$

Model of DRX Nucleation

It is accepted that DRX started to nucleate with a certain rate $\dot{n}$ when the dislocation density reached the critical value ρ_c .

$$\dot{n} = C\cdot\dot{\varepsilon}\cdot\exp\left(-\frac{Q_{act}}{RT}\right) \tag{4}$$

where C is constants related to material, Q_{act} is the active energy, R is the mole gas constant.

Model of DRX Growth

The growth of DRX grains (R-grains) is a process of grain boundary migration in grains. The growth velocity v_i is proportional to the driving force p_i per unit area. It is generally accepted that the driving force for growth of R-grains comes from the stored strain energy difference between the R-grains and the matrix:

$$v = \frac{b^2}{kT} D_0 \exp\left(-\frac{Q_b}{RT}\right) p_i \tag{5}$$

where k is the Boltzmann constant, D_0 is the boundary self-diffusion coefficient, Q_b is the boundary diffusion activation energy. The driving force of the i*th* R-grains can be calculated by:

$$p_i = -\frac{dG}{dV} = \tau\Delta\rho - \frac{2\gamma_i}{r_i} \tag{6}$$

where τ is the dislocation line energy, γ_i is boundary energy, r_i is R-grains radius.

MULTI-SCALE MODELLING

Coupled with CA and Deform 3D, a new method of multi-scale simulation in forging process was introduced to simulate microstructure evolution. The CA method characterized by discrete and synchronic calculation in space-time can be used to describe the evolution law in a physical system. All CA cells have same shape, and its states change at the same time according to identical rule. Based on dynamic model of DRX, CA can simulate microstructure evolution at micro-scale with suitable cell size. In this work, 2D CA with hexagonal cell and Neumann neighborhood was established. The state of a cell at a time t+1 is determined by the states of both itself and its neighbours at a time t through a transition rule, which can be expressed as:

$$X_{i,j}^{t+1} = f(X_{i-1,j}^t, X_{i+1,j}^t, X_{i,j}^t, X_{i-1,j-1}^t, X_{i,j-1}^t, X_{i,j+1}^t, X_{i+1,j+1}^t) \tag{7}$$

where $X_{i,j}^t$ is the state value X at site (i, j) at time t, f is the transition rule. During deformation process, each cell has different physical fields, such as temperature, strain and strain rate. It means dislocation energy distinction between adjacent cells. Maximal value is applied. Then, according to models of DRX, transition rates including nucleation rate and the rate that matrix changes to DRX status can be calculated.

For simplifying the model, two assumptions were accepted:

1) The dislocation density of primary grain is uniform and identical, and initial dislocation density of newly formed DRX is set as zero.

2) Nucleation of DRX only occurs on grain boundary and the second phase particles distribute in the alloy uniformly.

Commercial FEM software has found wide application in metal forming. Coupling effects between macro-scale and micro-scale were constructed in two aspects. Firstly, the physical fields at macro-scale level such as temperature field, stress and strain fields were obtained by commercial software Deform 3D, and were transferred to micro-scale through Point Tracking and interpolation. Consequently, influences of varied physical fields and forming history on microstructure evolution were considered through dislocation density model.

Another important effect of microstructure evolution during hot forming is grain deformation. Fig.1 shows the position of simulation plane at macro-scale. It was tracked using Deform 3D, and then newly reference coordinate was established in simulation plane. During homogeneous metallic rheology, strain of each grain was the same as that of sample, and its neighbourhood did not change during forging process. So, CA cell deformation can be expressed by true strain at the newly coordinate as follow:

$$\begin{bmatrix} L_2 \\ H_2 \end{bmatrix} = \begin{bmatrix} \exp(\varepsilon_{x2}) & 0 \\ 0 & \exp(\varepsilon_{y2}) \end{bmatrix} \begin{bmatrix} L_1 \\ H_2 \end{bmatrix} \tag{8}$$

Where L_1, H_1 are cell length and height pre-deformation, respectively. L_2, H_2 are cell length and height after deformation. ε_{x2}, ε_{y2} are true strain in the newly reference coordinate.

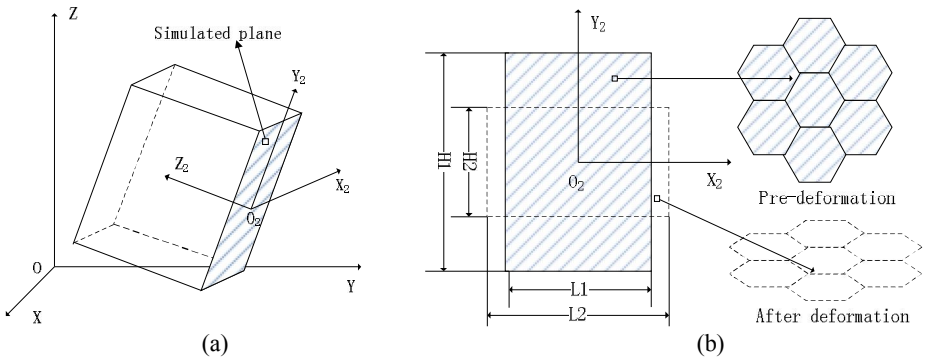

FIGURE 1. Grain deformation during hot forming: (a) position of CA simulation plane; (b) CA cell deformation

VERIFICATION EXPERIMENT

Experimental Process

7050 aluminum alloy scaled wheel (1:5) was carried out on a hydraulic press with nominal working pressure 3150KN and thermal insulation system. Two forging processes were carried out for deformation structures and DRX structures, respectively. Firstly, hot die forging process was adopted for deformation structures. The specimen was a tube billet with outer diameter of 69mm, inner diameter of 27mm and length of 50mm, which was made by free forging and mechanical processing. Before forging, the billet was heated in the furnace and the water graphite was sprayed on the surfaces when surface temperature was heated up to 150℃. Then, the billet was put into the furnace again and heated up to 450℃. Meanwhile, the moulds were heated on the press and lubricated by water graphite at 150℃. Then, they were also heated up to 350℃. After 1.5h heat preservation, the billet was taken out to transfer into the hot moulds immediately to forge. Punch speed of hydraulic press was maintained at 2mm/s. Secondly, isothermal die forging characterized by low punch speed and maintained temperature were carried out by hydraulic press. Processing parameters of isothermal die forging were set as follow:

1) The punch speed was 0.1mm/s;

2) Both the billet and moulds' temperature were maintained at 450℃.

Thermal insulation worked at this stage for maintaining temperatures of both billet and moulds. Other deformation conditions, such as billet and lubricant, were set the same as those of hot die forging.

Results and Discussion

Both hot die forging process and isothermal die forging process were simulated using DEFORM-3D. P1, P2 and P3 indicated three different simulated points where their macro-parameters were obtained by point tracking method in DEFORM 3D (see Fig. 2). In this work, flow stress and microstructure of P2 were compared with those of experiments in details.

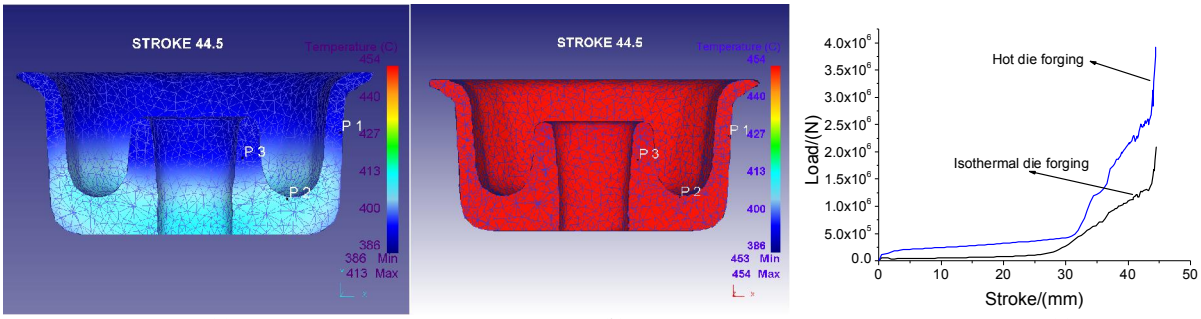

(a) (b) (c)

FIGURE 2. Forming simulation results of different deformation processes via DEFORM: (a) temperature distribution of hot die forging; (b) temperature distribution of isothermal die forging ; (c) comparison of deformation loads

The flow stress is proportional to the square root of dislocation density during hot forming, which can be written as $\sigma = \alpha\mu b\sqrt{\rho}$. At the condition of hot die forging, DRX percentage was only 15%.As shown in Fig. 3(a), flow stress reached 84Mpa, it agreed well with that of Sellars model regressed from experimental peak stress. It can precisely predict peak stress evolution with few DRX. Moreover, sufficient DRX took place at isothermal die forging, DRX percentage reached 70%. Flow stress decreased to 40MPa, and it turned out softening compared with that of peak stress. Obviously, the presented CA model considered DRX softening efficiency. It could precisely predict dislocation density evolution and flow stress of forging.

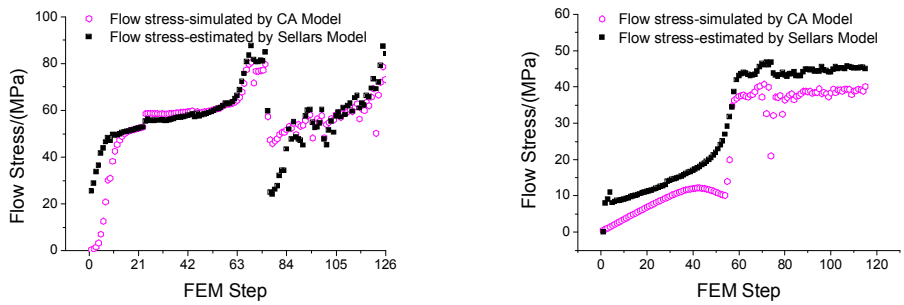

(a) (b)

FIGURE 3. Simulated flow stress of different deformation processes via CA: (a) hot die forging; (b) isothermal die forging

Fig.4 shows the simulated microstructure of different deformation processes. DRX increased greatly at the isothermal die forging, and microstructure transferred from deformation structures to small R-grains. Moreover, the microstructure including grain size, grain shape and DRX percentage, agreed well with those of multi-scale simulation (see Fig. 5). Then, we can conclude that the proposed multi-scale method can predicted microstructure evolution during forging process very well.

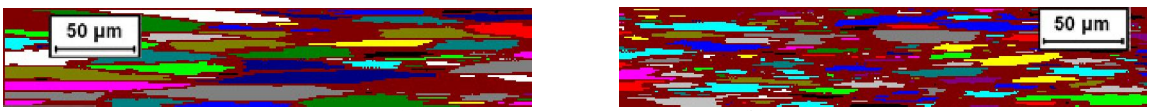

(a) (b)

FIGURE 4. Simulated microstructure of different deformation processes via CA: (a) hot die forging; (b) isothermal die forging

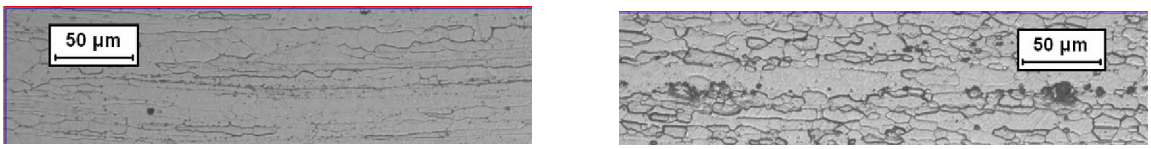

(a) (b)

FIGURE 5. Experimental microstructure of different deformation processes: (a) hot die forging; (b) isothermal die forging

SUMMARY

Dynamic model of DRX was established, including dislocation model, DRX nucleation model and DRX grain growth model. Its parameters were obtained from isothermal compression tests. Peak stress and steady stress were introduced to express recovery efficiency pre-DRX and after DRX, respectively.

Coupled FEM software and CA, a new method of multi-scale simulation in forging process was introduced to simulate microstructure evolution. Influences of varied deformation parameters, forming history and grain deformation on microstructure was considered. The physical fields at macro-scale level such as temperature field, stress and strain fields were transferred to micro-scale through Point Tracking and interpolation. Based on true strain at macro-scale, grain deformation model was established. Then, microstructure simulation program was established according to dynamic model of DRX using CA.

For verifying the efficiency of simulation, the experiments of aircraft wheel hub forging have been done in the laboratory at the condition of hot die forging and isothermal die forging. The proposed method could precisely predict dislocation density evolution of forging. With low DRX percentage 15%, the flow stress agreed well with that of Sellars model, which was regressed from experimental peak stress. Moreover, it took DRX softening efficiency into account. With high DRX percentage 70%, flow stress was relatively lower than that of Sellars model. The simulated microstructures obtained from hot die forging and isothermal die forging agreed well with those of experiments. It is proved that the proposed multi-scale method give us a useful digital method to predict the microstructure evolution and optimize deformation parameters of die forging.

ACKNOWLEDGMENTS

This work was supported in part by 973 Program (Grant No. 2010CB731700) and in part by key national project (Grant No. 2009ZX04005-011).

REFERENCES

1. H.H. Kim and C.G. Kang, *Materials Science and Engineering A* **497**, 309-321 (2008).
2. M.W. Fu and M.S. Yong, *SIMTech technical reports* **6**, 5-10 (2005).
3. S.K. Choi and M.S. Chun, *Journal of Materials Processing Technology* **172**, 88-95 (2006).
4. Yanqiu Zhang and Debin Shan, *Journal of Materials Processing Technology* **209**, 745-753 (2009).
5. Z.J. Zhang and G.Z. Dai, *Materials Science and Engineering A* **499**, 49-52 (2009).
6. R. Ding and Z.X. Guo, *Acta Materialia* **49**, 3163-3175 (2001).
7. N. M. Xiao and C. W. Zheng, *Computational Materials Science* **41**, 366-374 (2008).
8. F.R.M. Romlay et al., *Engineering Analysis with Boundary Elements* **34**, 297-305 (2010).
9. S.Q. Huang and Y.Y. Yi, *Journal of Central South University of Technology* **16**, 18-24 (2009).
10. Håkan Hallberg, Mathias Wallin and Matti Ristinmaa, *Computational Materials Science* **49**, 25-34 (2010).
11. Y.Y. Yi, X. Fu, J.D. Cui and H. Chen, *Journal of Central South University of Technology* **15**, 1-5 (2008).