Wireless Pers Commun (2012) 67:599–612
DOI 10.1007/s11277-011-0399-z

A Novel Haar Wavelet-Based BPSK OFDM System Robust to Spectral Null Channels and with Reduced PAPR

Xin-Lin Huang · Gang Wang · Jian Chen · Qing-Quan Sun

Published online: 6 September 2011

Abstract Orthogonal frequency-division multiplexing (OFDM) has lately gained a great deal of attention and is considered as a strong candidate for many next-generation wireless communication systems. However, OFDM is very sensitive to nonlinear effects due to the high peak-to-average power ratio (PAPR) owned by the transmitted signals and does not show robustness to spectral null channels. This paper proposes a novel BPSK OFDM system based on Haar wavelet transformation. The Haar wavelet transformation operates decomposition over the data symbol sequence after binary-to-complex mapping shows that half of the data symbols are zeros and the rest are either $\sqrt{2}$ or $-\sqrt{2}$. Then, we have the PAPR reduced by $10\log_{10} 2 \approx 3\,\text{dB}$ at most, compared with the conventional OFDM system. We also propose a novel decoding algorithm for the proposed OFDM system to show robustness to spectral null channels, and derive the bit error rate (BER) performance in theory from unbalanced QPSK modulation. Finally, we compare BER performance of our proposed OFDM with the conventional OFDM over different channels to show the excellent performance of our proposed OFDM system.

X.-L. Huang (✉) · G. Wang
Communication Research Center, Harbin Institute of Technology, Harbin 150001, People's Republic of China
e-mail: xlhitcrc@163.com

G. Wang
e-mail: gwang51@hit.edu.cn

J. Chen
Institute of Command Automation, PLA University of Science and Technology, Nanjing 210007, People's Republic of China
e-mail: jchen07@mails.tsinghua.edu.cn

Q.-Q. Sun
Department of Electrical and Computer Engineering, The University of Alabama, Tuscaloosa, AL 35487, USA
e-mail: qsun3@crimson.ua.edu

Keywords Peak-to-average power ratio (PAPR) · Spectral null channels · Bit error rate (BER) · Haar wavelet · Orthogonal frequency-division multiplexing (OFDM)

1 Introduction

Wireless digital communication is rapidly expanding, resulting in a demand for wireless systems that are reliable and have a high spectral efficiency. Orthogonal frequency division multiplexing (OFDM) has been considered as a promising candidate to achieve high rate data transmission in a mobile environment. Recently, OFDM has become the technique of choice for several popular broadband applications, such as asymmetric digital subscriber line (ADSL) modems, digital audio broadcasting (DAB) [1], digital video broadcasting (DVB) [2,3] and wireless local area networks (WLAN) systems (IEEE 802.11a [4], IEEE 802.11g [5]).

However, due to the large number of subcarriers used, OFDM systems have a large dynamic signal range with a very high peak-to-average power ratio (PAPR). As a result, the OFDM signal will be clipped when passed through a nonlinear power amplifier at the transmitter end. Clipping degrades the bit-error-rate (BER) performance and causes spectral spreading. One way to solve this problem is to force the amplifier to work in its linear region [6]. In high speed digital wireless applications, however, the inter-symbol interference (ISI) channel may have spectral nulls, which may degrade the performance of the existing OFDM systems because the Fourier transformation of the ISI channels needs to be inverted for each subcarrier at the OFDM receiver [7,8]. Hence, PAPR and spectral null channels need to be properly handled in implementation of OFDM systems [6,9,8–12], which are crucial for the performance of a real system.

The Wavelet-OFDM system was widely studied in [13–20]. However, Wavelet-OFDM just substitutes the DFT and IDFT with DWT and IDWT, respectively. The Wavelet-OFDM was studied to show robustness to Doppler [13]. In this paper, we propose a novel Haar wavelet-based BPSK OFDM system. Since the data symbol produced by BPSK modulator is either 1 or -1, the Haar wavelet transformation operates decomposition over the data symbol sequence after binary-to-complex mapping shows that half of the information symbols are zeros and the rest are either $\sqrt{2}$ or $-\sqrt{2}$. Then, the proposed BPSK-OFDM has the PAPR reduced by $10\log_{10} 2 \approx 3\,\text{dB}$ at most, compared with the conventional OFDM system. We also propose a novel decoding algorithm for our proposed OFDM system to show robustness to spectral null channels. Simulations and theory analysis are conducted to illustrate our analysis correctness.

In this paper, we assume no frequency offset and channel impulse response (CIR) is given in our OFDM system like our previous work [21–23]. The impact of ICI on OFDM system performance is widely discussed in [24,25]. Since the ICI exists in the real application system, we will jointly consider different digital modulations and wavelets to analysis the ICI impact and theoretical BER performance in our next research work. The CIR is usually estimated using feedback information, and different estimators (i.e., ML, MMSE) are proposed for CIR estimation.

The rest of the paper is organized as follows. In Sect. 2, we present the Haar wavelet-based BPSK OFDM system. In Sect. 3, we study the PAPR performance of the proposed OFDM system. In Sect. 4, we present a novel decoding algorithm and derive the BER performance of our proposed OFDM system. In Sect. 5, the theoretical and simulation results are presented to illustrate our theory analysis correctness.

2 Haar Wavelet-Based BPSK OFDM System

In this section, we propose a novel Haar-wavelet based BPSK OFDM system. It is formulated as follows, which is the goal of this section.

2.1 Haar Wavelet Transformation

The oldest and most basic wavelet system is named Haar wavelet that is a group of square waves with magnitude of ± 1 in the interval[0,1) [26,27]. In other words, the Haar functions are defined on the interval [0, 1) as

$$\varphi_0(t) = \begin{cases} 1, & \text{for } 0 \le t < 1 \\ 0, & \text{otherwise} \end{cases} \tag{2.1}$$

$$\varphi_1(t) = \begin{cases} 1, & \text{for } 0 \le t < \frac{1}{2} \\ -1, & \text{for } \frac{1}{2} \le t < 1 \\ 0, & \text{otherwise} \end{cases} \tag{2.2}$$

All the other subsequent functions are generated from $\varphi_1(t)$, which means

$$\varphi_i(t) = \varphi_1(2^j t - k) \tag{2.3}$$

where $i = 2^j + k,\ \ j \ge 0$ and $0 \le k < 2^j$. We have noticed that all the Haar wavelets are orthogonal to each other. From the Haar functions, we obtain the scale equation and wavelet equation as follows

$$\varphi(t) = \sqrt{2}\left(\frac{1}{\sqrt{2}}\varphi(2t) + \frac{1}{\sqrt{2}}\varphi(2t-1)\right) \tag{2.4}$$

$$\psi(t) = \sqrt{2}\left(-\frac{1}{\sqrt{2}}\varphi(2t) + \frac{1}{\sqrt{2}}\varphi(2t-1)\right) \tag{2.5}$$

From Eqs. (2.4) and (2.5), we get $h_0 = h_1 = 1/\sqrt{2}$ and $g_0 = -1/\sqrt{2},\ \ g_1 = 1/\sqrt{2}$, where $\{h_0, h_1\}$ constructs the low pass filter (LPF) and $\{g_0, g_1\}$ constructs the high pass filter (HPF). So the Haar wavelet decomposition over one-dimension digital signals can be expressed as

$$\begin{pmatrix} C(j) \\ D(j) \end{pmatrix} = T \cdot C(j+1), \quad \text{and} \tag{2.6}$$

$$T = \begin{bmatrix} \frac{1}{\sqrt{2}} & \frac{1}{\sqrt{2}} & 0 & 0 & 0 & \cdots & 0 & 0 \\ 0 & 0 & \frac{1}{\sqrt{2}} & \frac{1}{\sqrt{2}} & 0 & \cdots & 0 & 0 \\ & & & \vdots & & & & \\ 0 & 0 & 0 & 0 & 0 & \cdots & \frac{1}{\sqrt{2}} & \frac{1}{\sqrt{2}} \\ -\frac{1}{\sqrt{2}} & \frac{1}{\sqrt{2}} & 0 & 0 & 0 & \cdots & 0 & 0 \\ 0 & 0 & -\frac{1}{\sqrt{2}} & \frac{1}{\sqrt{2}} & 0 & \cdots & 0 & 0 \\ & & & \vdots & & & & \\ 0 & 0 & 0 & 0 & 0 & 0 & -\frac{1}{\sqrt{2}} & \frac{1}{\sqrt{2}} \end{bmatrix}_{N \times N} \tag{2.7}$$

From Eq. (2.6), we can compute the approximation coefficients vector $C(j)$ and detail coefficients vector $D(j)$, through operating Haar wavelet decomposition over the vector $C(j+1)$.

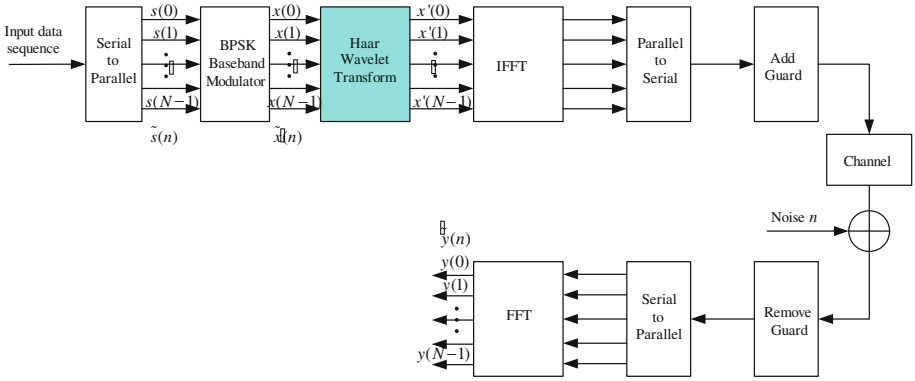

Fig. 1 The proposed Haar wavelet-based BPSK OFDM system

2.2 Proposed OFDM System

The proposed Haar wavelet-based BPSK OFDM system structure is shown in Fig. 1. We can see from Fig. 1 that the proposed system only increases Haar wavelet transformation at the transmitter compared with the conventional OFDM system.

To the best of our knowledge, there isn't any literature adds Haar wavelet transformation into conventional OFDM system directly, although some literatures use wavelet transformation to substitute the Fourier transformation unit [13–20], which is different from our paper. Our proposed Haar wavelet-based BPSK OFDM system has many advantages over the conventional OFDM system. The advantages of our proposed OFDM system are obtained from the Haar wavelet transformation.

2.3 The Principle of the Proposed OFDM System

The Haar wavelet transformation unit in Fig. 1 operates decomposition over the input data symbol sequence after binary-to-complex mapping. We denote the input data symbol as $\tilde{x}(n) = [x(0), x(1), \ldots, x(N-1)]^T$, and the decomposition result is $\tilde{x}'(n) = \left[x'(0), x'(1), \ldots, x'(N-1)\right]^T$. Since the input N by 1 vector sequence $\tilde{x}(n)$ is produced by BPSK baseband modulator, each component of $\tilde{x}(n)$ is either 1 or -1. The detail process of Haar wavelet decomposition over $\tilde{x}(n) = [x(0), x(1), \ldots, x(N-1)]^T$ is

$$\begin{bmatrix} x'(0) \\ x'(1) \\ \vdots \\ x'\left(\frac{N}{2}-1\right) \\ x'\left(\frac{N}{2}\right) \\ x'\left(\frac{N}{2}+1\right) \\ \vdots \\ x'(N-1) \end{bmatrix} = \begin{bmatrix} \frac{1}{\sqrt{2}} & \frac{1}{\sqrt{2}} & 0 & 0 & 0 & \cdots & 0 & 0 \\ 0 & 0 & \frac{1}{\sqrt{2}} & \frac{1}{\sqrt{2}} & 0 & \cdots & 0 & 0 \\ & & & \vdots & & & & \\ 0 & 0 & 0 & 0 & 0 & \cdots & \frac{1}{\sqrt{2}} & \frac{1}{\sqrt{2}} \\ -\frac{1}{\sqrt{2}} & \frac{1}{\sqrt{2}} & 0 & 0 & 0 & \cdots & 0 & 0 \\ 0 & 0 & -\frac{1}{\sqrt{2}} & \frac{1}{\sqrt{2}} & 0 & \cdots & 0 & 0 \\ & & & \vdots & & & & \\ 0 & 0 & 0 & 0 & 0 & 0 & -\frac{1}{\sqrt{2}} & \frac{1}{\sqrt{2}} \end{bmatrix}_{N\times N} \begin{bmatrix} x(0) \\ x(1) \\ \vdots \\ x(N-1) \end{bmatrix} \tag{2.8}$$

From Eq. (2.8), we can conclude that: If $x'(i) \neq 0,\ i = 0, 1, \ldots, N/2 - 1$, then

$$x'(i) = \sqrt{2} \text{ or } -\sqrt{2}$$
$$x'\left(i + \frac{N}{2}\right) = 0 \tag{2.9}$$

If $x'(i) = 0,\ i = 0, 1, \ldots, N/2 - 1$, then

$$x'\left(i + \frac{N}{2}\right) = \sqrt{2} \text{ or } -\sqrt{2} \tag{2.10}$$

After Haar wavelet transformation, half of the coefficients $\tilde{x}'(n) = [x'(0), x'(1), \ldots, x\prime(N-1)]^T$ are zeros, and the remaining coefficients are either $\sqrt{2}$ or $-\sqrt{2}$.

Since the Haar wavelet transformation is added in conventional OFDM system, the computational complexity will increase. However, the Haar wavelet transformation is simply to operate at the transmitter as follows

$$\begin{bmatrix} x'(0) \\ x'(1) \\ \vdots \\ x'\left(\frac{N}{2} - 1\right) \\ x'\left(\frac{N}{2}\right) \\ x'\left(\frac{N}{2} + 1\right) \\ \vdots \\ x'(N-1) \end{bmatrix} = \begin{bmatrix} \frac{1}{\sqrt{2}}[x(0) + x(1)] \\ \frac{1}{\sqrt{2}}[x(2) + x(3)] \\ \vdots \\ \frac{1}{\sqrt{2}}[x(N-2) + x(N-1)] \\ \frac{1}{\sqrt{2}}[-x(0) + x(1)] \\ \frac{1}{\sqrt{2}}[-x(2) + x(3)] \\ \vdots \\ \frac{1}{\sqrt{2}}[-x(N-2) + x(N-1)] \end{bmatrix} \tag{2.11}$$

From (2.11), we can see that the proposed OFDM system don't increase too much computational complexity, compared with the conventional OFDM system.

3 PAPR Performance

In this section, we study the PAPR benefits of the proposed OFDM system. In OFDM system, PAPR is the peak power per OFDM symbol versus the average power in the same symbol [28,29], i.e., mathematically

$$\text{PAPR} = \frac{\max |x(t)|^2}{E\left\{|x(t)|^2\right\}} \tag{3.1}$$

Suppose that the average power of the conventional OFDM system is $\bar{P}_{\text{OFDM}}$ with the signal peak value A_{OFDM} and the average power of the Haar wavelet-based BPSK OFDM system is $\bar{P}_{\text{DWT/OFDM}}$ with the signal peak value $A_{\text{DWT/OFDM}}$. The average power of the conventional OFDM and the proposed OFDM system is equal for every frame, which can be derived from Parseval theorem, which means

$$\bar{P}_{\text{DWT/OFDM}} = \bar{P}_{\text{OFDM}} \tag{3.2}$$

Since the Haar wavelet transformation used in our proposed OFDM system, half of the information symbols are zeros and the rest are either $\sqrt{2}$ or $-\sqrt{2}$ in each OFDM symbol. Hence, non-zero symbols in Haar wavelet-based BPSK OFDM system only occupies half of the subcarriers and the magnitude of each symbol is $\sqrt{2}$ times compared with conventional

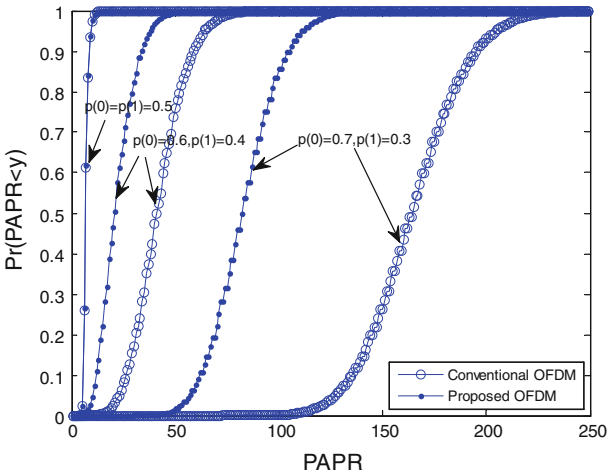

Fig. 2 Cumulative distribution functions for PAPR for the proposed OFDM versus conventional OFDM under different input symbol's probability

OFDM system (see Sect. 2.3). Considering the worst situation (all subcarriers appear the maximal value at the same time), we get

$$\frac{A_{\mathrm{DWT/OFDM}}}{A_{\mathrm{OFDM}}} = \frac{\sqrt{2} \times \frac{N}{2}}{N} = \frac{\sqrt{2}}{2}$$
$$\left(\frac{A_{\mathrm{DWT/OFDM}}}{A_{\mathrm{OFDM}}}\right)^2 = \frac{1}{2} \tag{3.3}$$

where N is the number of subcarriers in OFDM system. Equation (3.3) means the peak power of the Haar wavelet-based BPSK OFDM system is reduced by half, compared with the conventional OFDM system. So Haar wavelet-based BPSK OFDM system's peak-average power ratio (PAPR) is reduced by $10 \log_{10} 2 = 3$ dB at most, compared with the conventional OFDM system. Hence, the proposed Haar wavelet-based BPSK OFDM system is able to overcome the drawback of conventional OFDM system, with lower peak-average power ratio.

Next, we present our empirical study characterizing the PAPR benefits via cumulative distribution functions [30,31], assuming $N = 1{,}024$ subcarriers.

Figure 2 shows the cumulative distribution functions of the PAPR, determined empirically over one million OFDM symbols. As seen in Fig. 2, the proposed OFDM improves the PAPR statistics of OFDM. When the probability of input symbol '1' or '0' is 0.5, the proposed OFDM approximately has the same cumulative distribution functions as the conventional OFDM. When the probability of input symbol '1' or '0' larger than 0.6, Fig. 2 shows the proposed OFDM almost has the PAPR reduced by 3 dB approximately, which is agree with our theory analysis.

Specifically, when the probability of input symbol "1" (after BPSK modulation, it is "−1") or "0" (after BPSK modulation, it is "1") is 0.5, a high peak value of OFDM symbols appears with a low probability due to the peak values from different subcarriers can cancel each other. When the probability of "0" or "1" becomes larger or smaller, a lot of symbols with the same phase will add together and produce a larger peak value (thus higher PAPR). Moreover, the PAPR value of OFDM system is also proportional to the number of subcarriers. Our theoretical analysis in Eq. (3.3) shows that the PAPR value of our proposed OFDM

system can be reduced by $10\log_{10} 2 = 3\,\text{dB}$ at most, compared with the conventional OFDM system.

4 Decoding Algorithm and Performance Analysis

Let N be the number of subcarriers in the OFDM system. The ISI channels have the following transfer function:

$$H(z) = \sum_{n=0}^{D} h(n) z^{-n} \tag{4.1}$$

where $h(n)$ is the impulse responses of the ISI channel, which can be obtained from the reverse link channel estimation in time division duplexing (TDD) systems [32]. $D+1$ is the CIR length in OFDM system.

4.1 Decoding Algorithm

As we know, the output data sequence y_l has the following relationship with the input data sequence x'_l at the lth subcarrier

$$y_l = H_l x'_l + n_l \tag{4.2}$$

where $H_l = H(z)\big|_{z=\exp(j2\pi l/N)}$ and n_l is Additional Gaussian White Noise (AWGN). At the decoder, we decode the output sequence y_l and $y_{l+\frac{N}{2}}$ simultaneously, that is

$$\begin{bmatrix} y_l \\ y_{l+\frac{N}{2}} \end{bmatrix} = \begin{bmatrix} H_l & 0 \\ 0 & H_{l+\frac{N}{2}} \end{bmatrix} \begin{bmatrix} x'_l \\ x'_{l+\frac{N}{2}} \end{bmatrix} + \begin{bmatrix} n_l \\ n_{l+\frac{N}{2}} \end{bmatrix} \tag{4.3}$$

where $l = 0, 1, \ldots, N/2$, n_l and $n_{l+\frac{N}{2}}$ are independently, identically distributed Gaussian random variables. Since the input data sequence $\left[x'_l, x'_{l+\frac{N}{2}}\right]^T$ only be one of the following four possible symbols, which is

$$\begin{bmatrix} x'_l \\ x'_{l+\frac{N}{2}} \end{bmatrix} = \begin{bmatrix} \sqrt{2} \\ 0 \end{bmatrix}, \begin{bmatrix} -\sqrt{2} \\ 0 \end{bmatrix}, \begin{bmatrix} 0 \\ \sqrt{2} \end{bmatrix}, \quad \text{or} \quad \begin{bmatrix} 0 \\ -\sqrt{2} \end{bmatrix}$$

Corresponding to

$$\begin{bmatrix} s_l \\ s_{l+\frac{N}{2}} \end{bmatrix} = \begin{bmatrix} 0 \\ 0 \end{bmatrix}, \begin{bmatrix} 1 \\ 1 \end{bmatrix}, \begin{bmatrix} 1 \\ 0 \end{bmatrix}, \quad \text{or} \quad \begin{bmatrix} 0 \\ 1 \end{bmatrix} \tag{4.4}$$

where $\left[s_l, s_{l+\frac{N}{2}}\right]^T$ represents the decoding results over lth and $l+\frac{N}{2}$th subcarriers. At the receiver, we use maximum-likelihood (ML) estimation. The ML estimation is used to find out which $\left[s_l, s_{l+\frac{N}{2}}\right]^T$ is sent from the transmitter, which means

$$\begin{aligned}\left[s_l, s_{l+\frac{N}{2}}\right]^T &= \arg\left(\left[y_l, y_{l+\frac{N}{2}}\right]^T\right)\\ &= \arg\left(\arg\left(\min\left\{\left[\begin{bmatrix} y_l \\ y_{l+\frac{N}{2}}\end{bmatrix} - \begin{bmatrix} H_l & 0 \\ 0 & H_{l+\frac{N}{2}}\end{bmatrix}\begin{bmatrix} x'_l \\ x'_{l+\frac{N}{2}}\end{bmatrix}\right]^H \cdot \left[\begin{bmatrix} y_l \\ y_{l+\frac{N}{2}}\end{bmatrix} - \begin{bmatrix} H_l & 0 \\ 0 & H_{l+\frac{N}{2}}\end{bmatrix}\begin{bmatrix} x'_l \\ x'_{l+\frac{N}{2}}\end{bmatrix}\right]\right\}\right)\right)\end{aligned} \tag{4.5}$$

The decoding algorithm considers the correlation of the transmitted symbols sufficiently. The performance analysis will present later to illustrate the improvement of our proposed OFDM system.

4.2 Performance Analysis

Since the Haar wavelet transformation used in our proposed OFDM system, half of the information symbols are zeros and the rest are either $\sqrt{2}$ or $-\sqrt{2}$ in each OFDM symbol. Considering the best condition, when the receiver detects the zero-loaded subcarriers correctly, we can remove half of the noise power. Then, the proposed OFDM system will improve the BER performance 3 dB. Hence, the Haar wavelet-based BPSK OFDM system's BER performance is better than the conventional OFDM system, reducing the BER 3 dB at most.

We now derive the BER performance for the proposed OFDM system in theory. From Eq. (4.3), we can see that, the decoding algorithm is the same as unbalanced QPSK (UQPSK) demodulation method. The BER performance of UQPSK has been studied in [33], using Costas loop demodulation at the receiver. Hence, the BER performance of our proposed OFDM system can be derived from UQPSK system. We assume the CIR energy has been normalized, that is

$$\begin{aligned} |h(0)|^2 + |h(1)|^2 + \cdots + |h(D)|^2 &= 1, \quad \text{and} \\ |H_0|^2 + |H_1|^2 + \cdots + |H_{N-1}|^2 &= N \end{aligned} \tag{4.6}$$

Hence, the total energy E of the proposed OFDM symbol is

$$E = \left(|H_0|^2 + |H_1|^2 + \cdots + |H_{N-1}|^2\right) = N \tag{4.7}$$

We assume the power and power spectrum density (PSD) of AWGN is P_ε and N_0, respectively. We also assume the sample period of OFDM system is 1, and then the signal-to-noise ratio [34] (SNR) of the proposed OFDM system can be expressed as

$$\text{SNR} = \frac{E/N}{P_\varepsilon} = 1/P_\varepsilon = 1/N_0 \tag{4.8}$$

From [33], we can derive the BER performance for the proposed OFDM system

$$p_b(\text{Proposed OFDM}) = \frac{1}{2N}\sum_{i=0}^{N-1} erfc(A_i) \tag{4.9}$$

where $A_i = \sqrt{2\,|H(i)|^2/N_0} = \sqrt{2\,|H(i)|^2 \cdot \text{SNR}}$, and

$$erfc(x) = \frac{2}{\sqrt{\pi}}\int_x^{+\infty} \exp\left(-y^2\right)dy \tag{4.10}$$

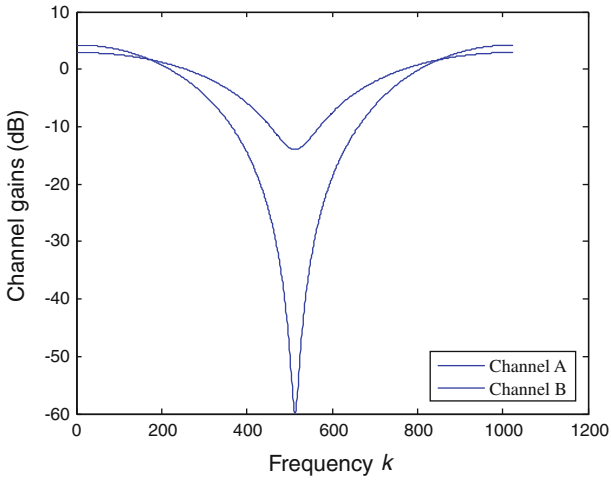

Fig. 3 Channel gains

While the BER performance in theory for conventional BPSK OFDM system is

$$p_b(\text{Conventional OFDM}) = \frac{1}{N}\sum_{i=0}^{N-1} Q\left(A_i\right) \tag{4.11}$$

where $Q(x) = \int_x^{+\infty} e^{-\frac{y^2}{2}} dy$. From Eqs. (4.9) and (4.11), we have

$$erfc(x) \leq \frac{2}{\sqrt{\pi}} Q(x), \text{ and}$$

$$p_b(\text{Proposed OFDM}) \leq \frac{1}{\sqrt{\pi}} \cdot p_b(\text{Conventional OFDM}) \tag{4.12}$$

From unequal Eq. (4.12), we can see that our proposed performs better than conventional OFDM system.

5 Simulation Results

In this section, we provide the theoretical and simulation results of the BER versus SNR for (1) the conventional OFDM system and (2) the proposed Haar wavelet-based BPSK OFDM system.

We consider 1,024 subcarriers, i.e.,$N = 1{,}024$, and assume that BPSK modulation is used in the conventional OFDM and proposed OFDM system. We consider the following two fixed ISI channels, which are selected from the examples presented in [35].

Channel A: $h = [0.407, 0.815, 0.407]$, which is a spectral-null channel.

Channel B: $h = [0.8, 0.6]$, although it does not have spectral-nulls, its Fourier transform values at some frequencies are small.

The channels' characteristics (channel gains) are plotted in Fig. 3. In addition, in Figs. 4 and 5, we have shown the comparison of the BER performance between the conventional OFDM system and the proposed OFDM system.

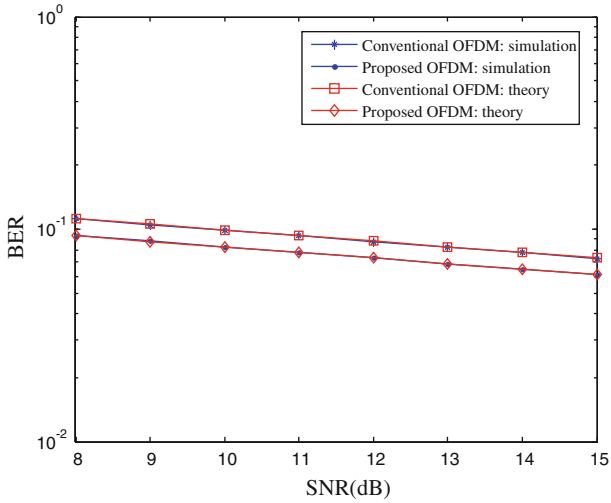

Fig. 4 Performance comparison for OFDM systems: channel A

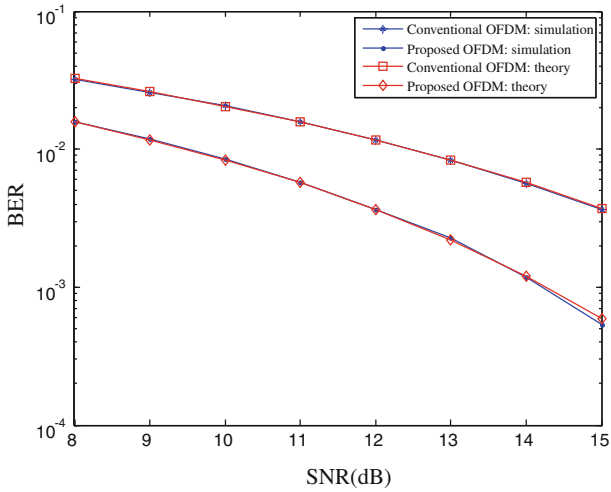

Fig. 5 Performance comparison for OFDM systems: channel B

For simplicity, we assume that the maximum-likelihood (ML) estimation method is used at the receiver, although the BER performance in theory is based on Costas loop demodulation. From Figs. 4 and 5, one can clearly see the improvement of the proposed OFDM system performance. Since the nonspectral-null property of Channel B is better than that of Channel A, one can see that the BER performances of all the OFDM systems in Fig. 5 for Channel B are better than the ones in Fig. 4 for Channel A.

In Figs. 4 and 5, the spectral-null property of Channel A and Channel B makes the conventional OFDM system performs poorly. One can also see that the proposed OFDM system can improve the BER performance 3 dB at most. Hence, our proposed OFDM system shows robustness to spectral-null channel compared with the conventional OFDM system, which is very preferable in practical applications.

The theoretical analysis curves are also presented in Figs. 4 and 5. One can see that the theoretical curves for our proposed OFDM match well with the simulation results after SNR lager than 5 dB, which illustrates the correctness of our performance analysis.

6 Conclusion

In this paper, we proposed a novel Haar wavelet-based BPSK OFDM system. Since the Haar wavelet transformation is used in our proposed OFDM system, half of the information symbols are zeros and the rest are either $\sqrt{2}$ or $-\sqrt{2}$ in each OFDM symbol. The simulation results and theory analysis illustrate the proposed system has two advantages compared with conventional OFDM system: (1) reduces the PAPR by 3 dB at most (2) shows robustness to spectral null channels, improving BER performance 3dB at most. Analysis also show that our proposed OFDM system dose not increase too much computational complexity at the transmitter.

Since our proposed OFDM system is only suitable for BPSK modulation, our next research work will focus on wavelet transformation over different baseband modulation scheme, i.e. MQAM and MPSK.

Acknowledgments This work was supported in part by China Ministry of Science and Technology under Grant No. 2007CB310601.

References

1. Radio Broadcasting Systems; Digital Audio Broadcasting (DAB) to Mobile, Portable and Fixed Receiver, ETSI EN 300 401 V1.3.3 (2001-5), May 2001.
2. Nee, R. V., & Prasad, R. (2000). *OFDM for wireless multimedia communications.* Boston, USA: Artech House Publisher.
3. Wu, H., Huang, X., & Xu, D. (2006). Novel semi-blind ICI equalization algorithm for wireless OFDM systems. *IEEE Transactions on Broadcasting, 52*(2), 211–218.
4. Draft supplement to standard for telecommunications and information exchange between systems-LAN/MSN specific requirements-Part 11: Wireless MAC and PHY specifications: High speed physical layer in the 5 GHz band, IEEE 802.11, May 1999.
5. Project IEEE 802.11g Standard for Higher Rate (20+Mbps) (2003). Extensions in the 2.4 GHz Band, IEEE P802.11-TASK GROUP G-.
6. Slimane, S. B. (2007). Reducing the peak-to-average power ratio of OFDM signals through precoding. *IEEE Transactions on Vehicular Technology, 56*(2), 686–695.
7. Manton, J. H. (2002). The convex geometry of subchannel attenuation coefficients in linearly precoded OFDM systems. *IEEE Transactions on Information Theory, 48*(5), 1203–1206.
8. Shah, S. F. A., & Tewfik, H. (2008). Design and analysis of post-coded OFDM systems. *IEEE Transactions on Wireless Communications, 7*(12), 4907–4918.
9. Wu, Z., & Nassar, C. R. (2005). Narrowband interference rejection in OFDM via carrier interferometry spreading codes. *IEEE Transactions on Wireless Communications, 4*(4), 1491–1505.
10. Bölcskei, H. (2001). Blind estimation of symbol timing and carrier frequency offset in wireless OFDM systems. *IEEE Transactions on Communications, 49*(6), 988–999.
11. Chung, C. (2006). Spectrally precoded OFDM. *IEEE Transactions on Communications, 54*(12), 2173–2185.
12. Wang, X., Paul, H., & Wu, Y. (2005). Robust channel estimation and ISI cancellation for OFDM systems with suppressed features. *IEEE Journal on Selected Areas in Communications, 23*(5), 963–972.
13. Oltean, M., & Nafornita, M. (2009). Error per scale statistics for a wavelet OFDM transmission in flat fading channels. In *Proceedings of IEEE WISP2009* (pp. 119–124).
14. Lin, H., & Siohan, P. (2008). OFDM/OQAM with Hermitian symmetry: Design and performance for baseband communication. In *Proceedings of IEEE ICC2008* (pp. 652–656).

15. Wei, S., et al. (2008). Performance of wavelet OFDM in underground coal mine PLCs. In *Proceedings of the Second International Symposium on Intelligent Information Technology Application, IEEE* (pp. 723–727).
16. Zbydniewski, L., et al. (2008). Performance analysis of uncoded/coded windowed-OFDM and circular wavelet-OFDM transmission in PLC channel with bit-loading. In *Proceedings of IEEE ICSES2008*, (pp. 423–426).
17. Mohseni, R., Sheikhi, A., & Masnadi Shirazi, M. A. (2008). UWB radars based on wavelet packet OFDM signals. In *Proceedings of IEEE ICUWB2008* (Vol. 2, pp. 89–92).
18. Mohseni, R., Sheikhi, A., & Masnadi Shirazi, M. A. (2008). Wavelet packet based OFDM radar signals. In *Proceedings of IEEE RADAR2008* (pp. 552–557).
19. Maki, S., Okamoto, E., & Iwanami, Y. (2007). Performance improvement of Haar-based wavelet packet modulation in multipath fading environment. In *Proceedings of IEEE ISCIT2007* (pp. 1021–1026).
20. Karamehmedovic, D., Lakshmanan, M. K., & Nikookar, H. (2008). Performance of wavelet packet modulation and OFDM in the presence of carrier frequency and phase noise. In *Proceedings of the 1st European Wireless Technology Conference, IEEE* (pp. 166–169).
21. Huang, X.-L., Wang, G., & Hu, F. (2010). Modulated coded OFDM systems with special precoder, Wireless Personal Communications, Published online. doi:10.1007/s11277-010-9964-0.
22. Huang, X.-L., Wang, G., & Hu, F. (2010). Rotated precoder-based OFDM system robust to channel spectral nulls and with reduced PAPR. *Annals of Telecommunications, 65*(7–8), 375–383.
23. Huang, X.-L., Wang, G., & Hu, F. (2011). Minimal euclidean distance-inspired optimal and sub-optimal modulation schemes for vector OFDM system. *International Journal of Communication Systems, 24*(5), 553–567.
24. Le, K. N., & Dabke, K. P. (2010). BER of OFDM with diversity and pulse shaping in Rayleigh fading environments. *Digital Signal Processing, 20*(6), 1687–1696.
25. Le, Khoa N. (2008). Bounds on inter-carrier interference power of OFDM in a Gaussian scattering channel. *Wireless Personal Communications, 47*(3), 355–362.
26. Davis, T. J. (1999). Fast decomposition of digital curves into polygons using the Haar transform. *IEEE Transactions on Pattern Analysis and Machine Intelligence, 21*(8), 786–790.
27. Hsiao, C., & Wang, W. (2000). State analysis and parameter estimation of bilinear systems via Haar wavelets. *IEEE Transactions on Circuits and Systems I: Fundamental Theory and Applications, 47*(2), 246–250.
28. Lin, Y. P., & Phoong, S. M. (2003). BER minimized OFDM systems with channel independent precoders. *IEEE Transactions on Signal Processing, 51*(9), 2369–2380.
29. Yücek, T., & Arslan, H. (2007). MMSE noise plus interference power estimation in adaptive OFDM systems. *IEEE Transactions on Vehicular Technology, 56*(6), 3857–3863.
30. Slimane, S. B. (2007). Reducing the peak-to-average power ratio of OFDM signals through precoding. *IEEE Transactions on Vehicular Technology, 56*(2), 686–695.
31. Wiegandt, D. A., Wu, Z., & Nassar, C.R. (2003). High-throughput, high-performance OFDM via pseudo-orthogonal carrier interferometry spreading codes. *IEEE Transactions on Communications, 51*(7), 1123–1134.
32. Love, D. J., & Heath, R. W. Jr. (2005). OFDM power loading using limited feedback. *IEEE Transactions on Vehicular Technology, 54*(5), 1773–1780.
33. Simon, M. K. (1978). Error probability performance of unbalanced QPSK receivers. *IEEE Transactions on Communications, 26*(9), 1390–1397.
34. Le, K. N. (2009). Lower-bound on SNR of the *n*th-order hyperbolic time-frequency kernel. *Journal of Sound and Vibration, 321*(1–2), 405–415.
35. Xia, X. G. (2001). Precoded and vector OFDM robust to channel spectral nulls and with reduced cyclic prefix length in single transmit antenna systems. *IEEE Transactions on Communications, 49*(8), 1363–1374.

Author Biographies

Xin-Lin Huang is working for Ph.D. degree in communication engineering at Communication Research Center, Harbin Institute of Technology, Harbin, People's Republic of China. Recently, he is a research scholar in the Department of Electrical and Computer Engineering, The University of Alabama, Tuscaloosa, USA (Joint Ph.D. program supported by Chinese Government). His research focuses on joint source-channel coding, OFDM technology and Cognitive Radio Network. He was a recipient of Chinese Government Award for Outstanding Ph.D. Students in 2010. He is a student member of IEEE and paper reviewer for "IEEE Communications Letters", "Wireless Personal Communications", "International Journal of Communication Systems", and international conferences "IEEE ICCNT2011", "IEEE ICOEIS2011" and "IEEE ICCCT2011".

Gang Wang as professor, he is now with the Communication Research Center, Harbin Institute of Technology, Harbin, People's Republic of China. His general interests include joint source-channel coding, ISDN, and wireless communications. He has published over 50 research papers and four books in these fields. He was a recipient of "National Grade II Prize of Science and Technology Progress" and "National Grade III Prize of Science and Technology Progress".

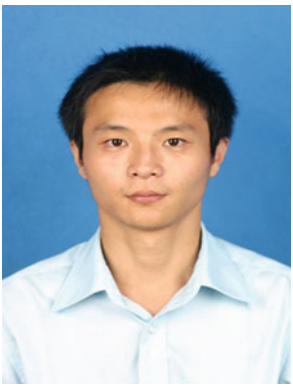

Jian Chen received B.Sc. in Automation and M.Sc. in Computer Science from PLA University of Science and Technology, Nanjing, China, in 2001 and 2004, respectively. Since 2007, he work toward his Ph.D. degree in the Department of Computer Science and Technology, Tsinghua University. His research interest includes wirless mesh network, WLAN, mobile ad-hoc network, network measurement and network management.

Qing-Quan Sun is currently a Ph.D. candidate in the Department of Electrical and Computer Engineering, The Univ. of Alabama, Tuscaloosa, AL, USA. He obtained his Master degree from China Academy of Science in 2009. His research interests include wireless sensor networks and machine learning. He is now a student member of IEEE and research assistant at cognitive network & security lab.